18.36.54House

盘龙 陈柱燊

18.36.54House名字由来

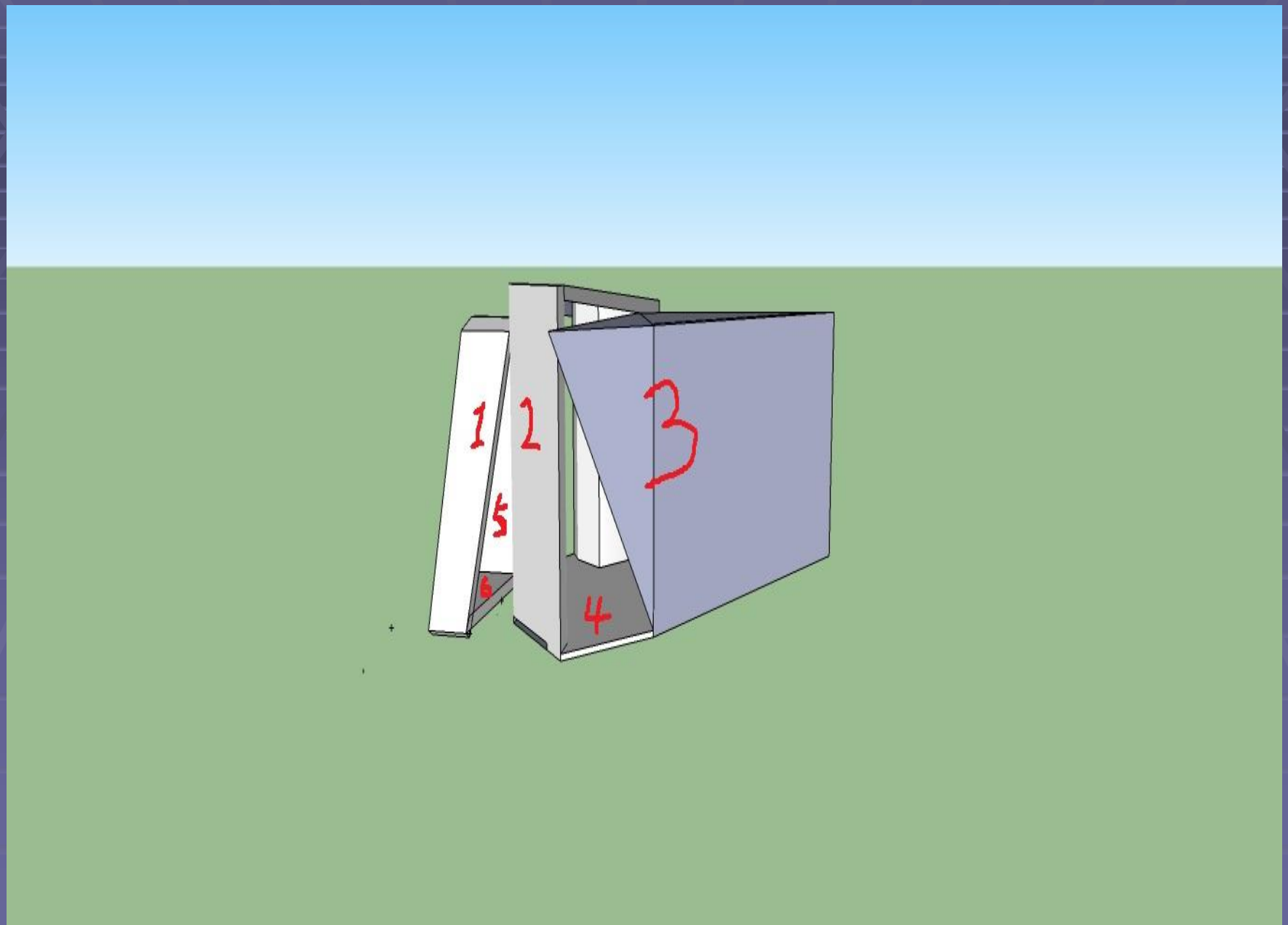

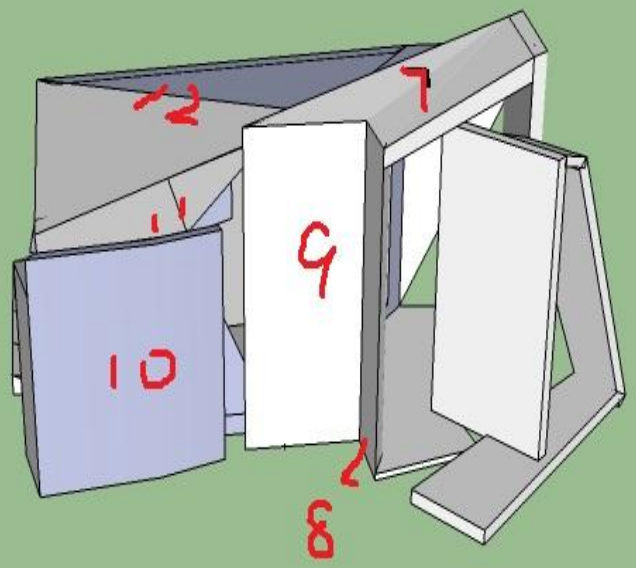
12
7
11
9
10
2
8

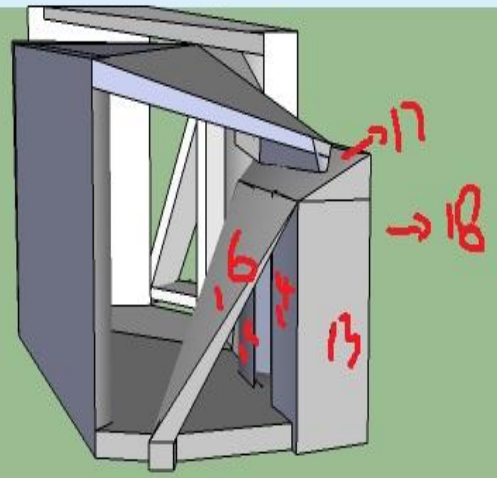

由54条线连接36个点组成18个位面形成的连续螺旋带构成

场地条件

纬度：40°58'N to 42°3'N

天气：温带海洋性气候

材料

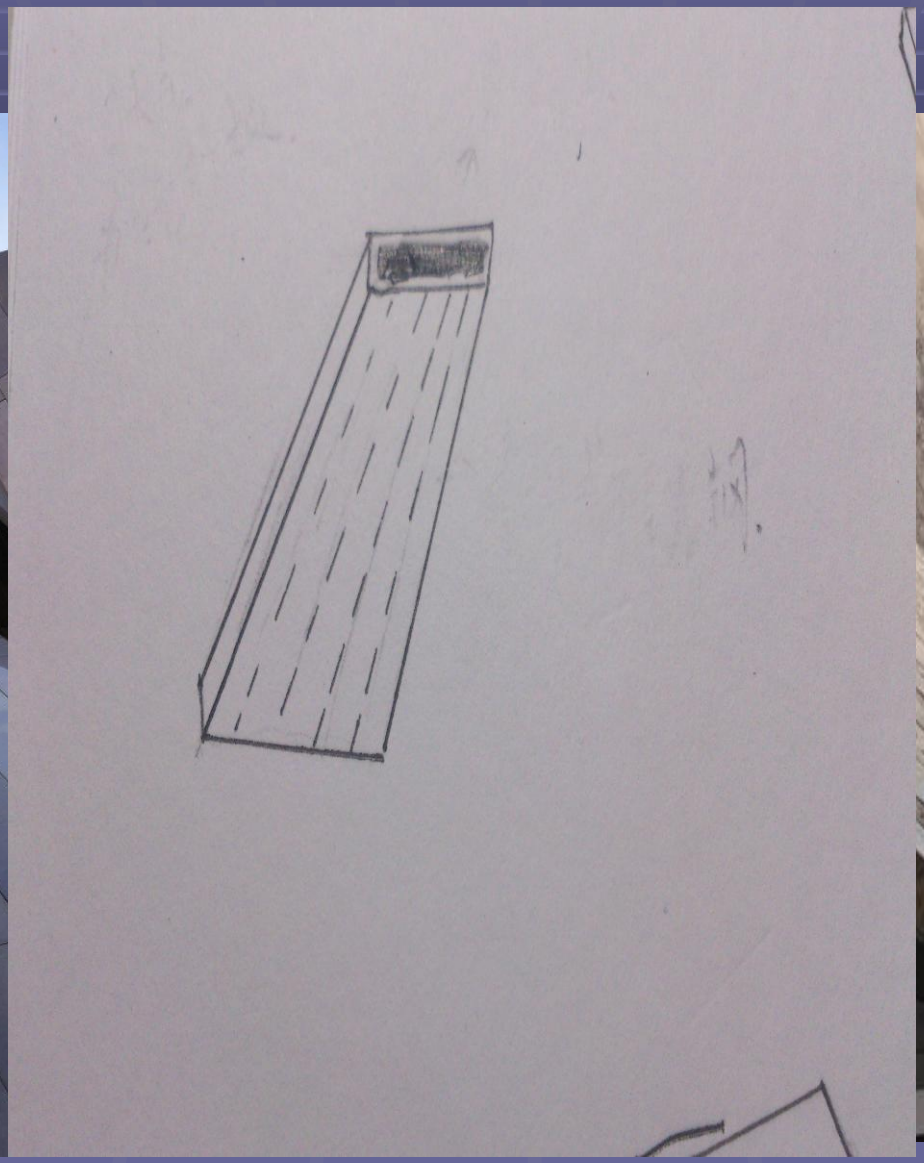

结构

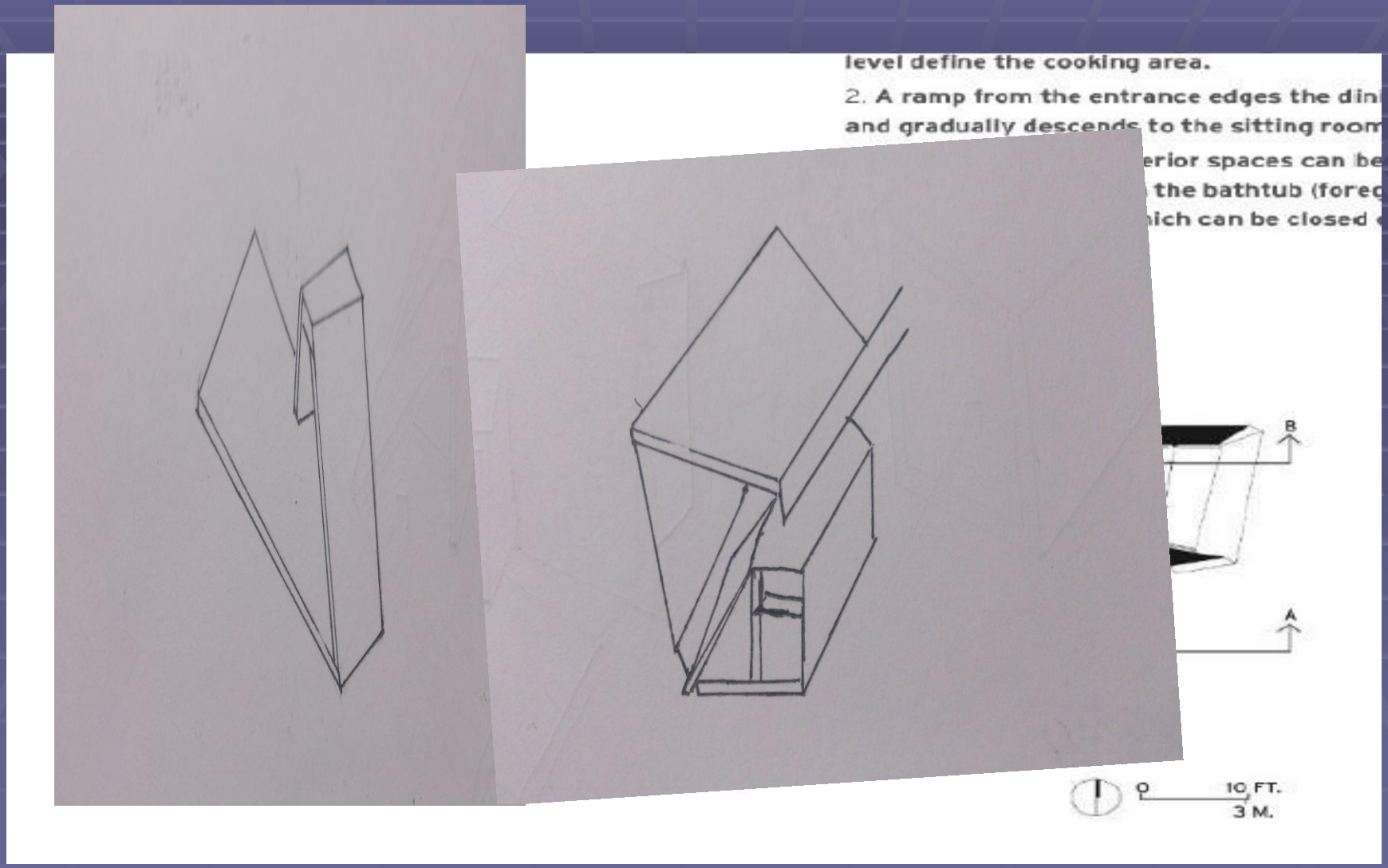
level define the cooking area.
2. A ramp from the entrance edges the din
and gradually descends to the sitting room
erior spaces can be
the bathtub (foreg
ich can be closed
B
A
0
10 FT.
3 M.

空间　流通性

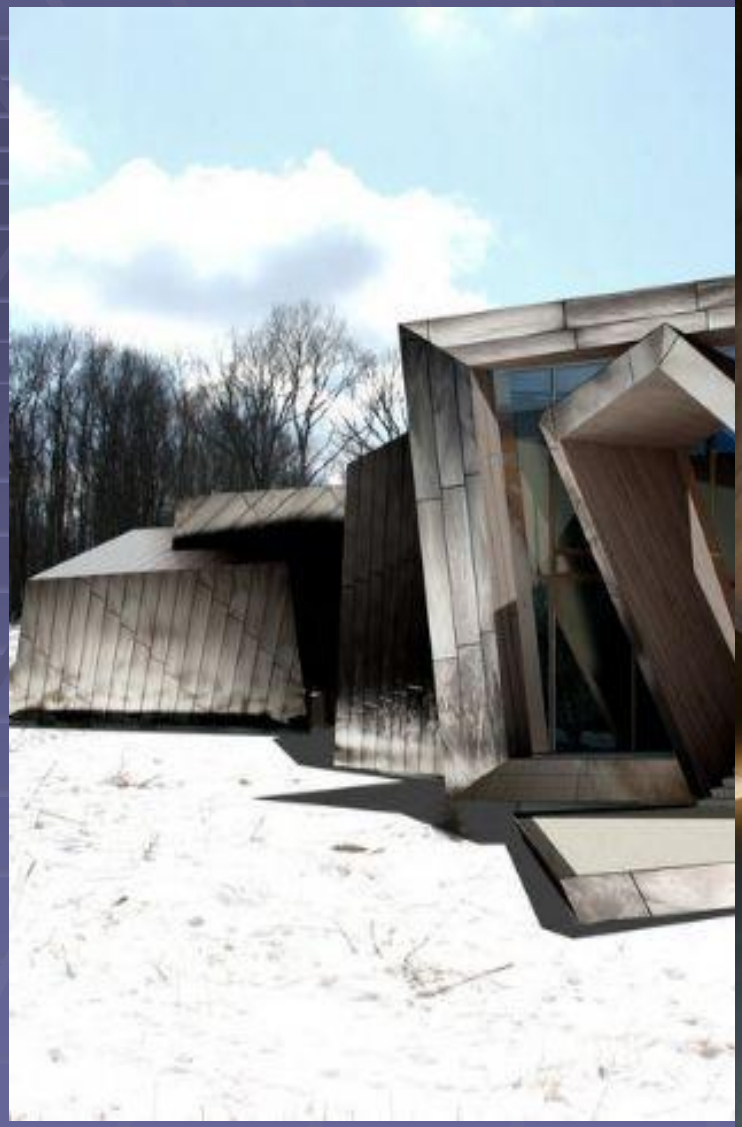

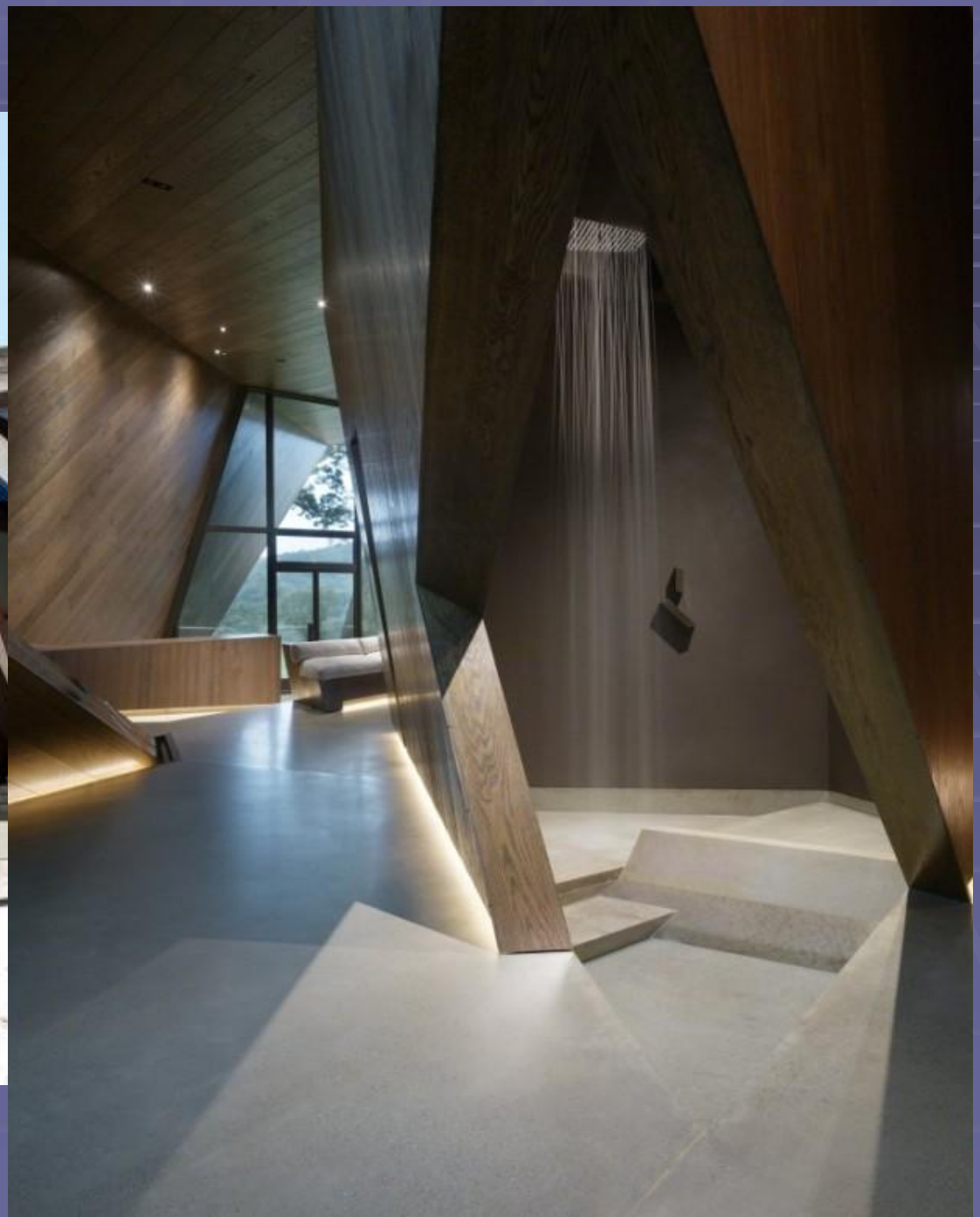

私密性

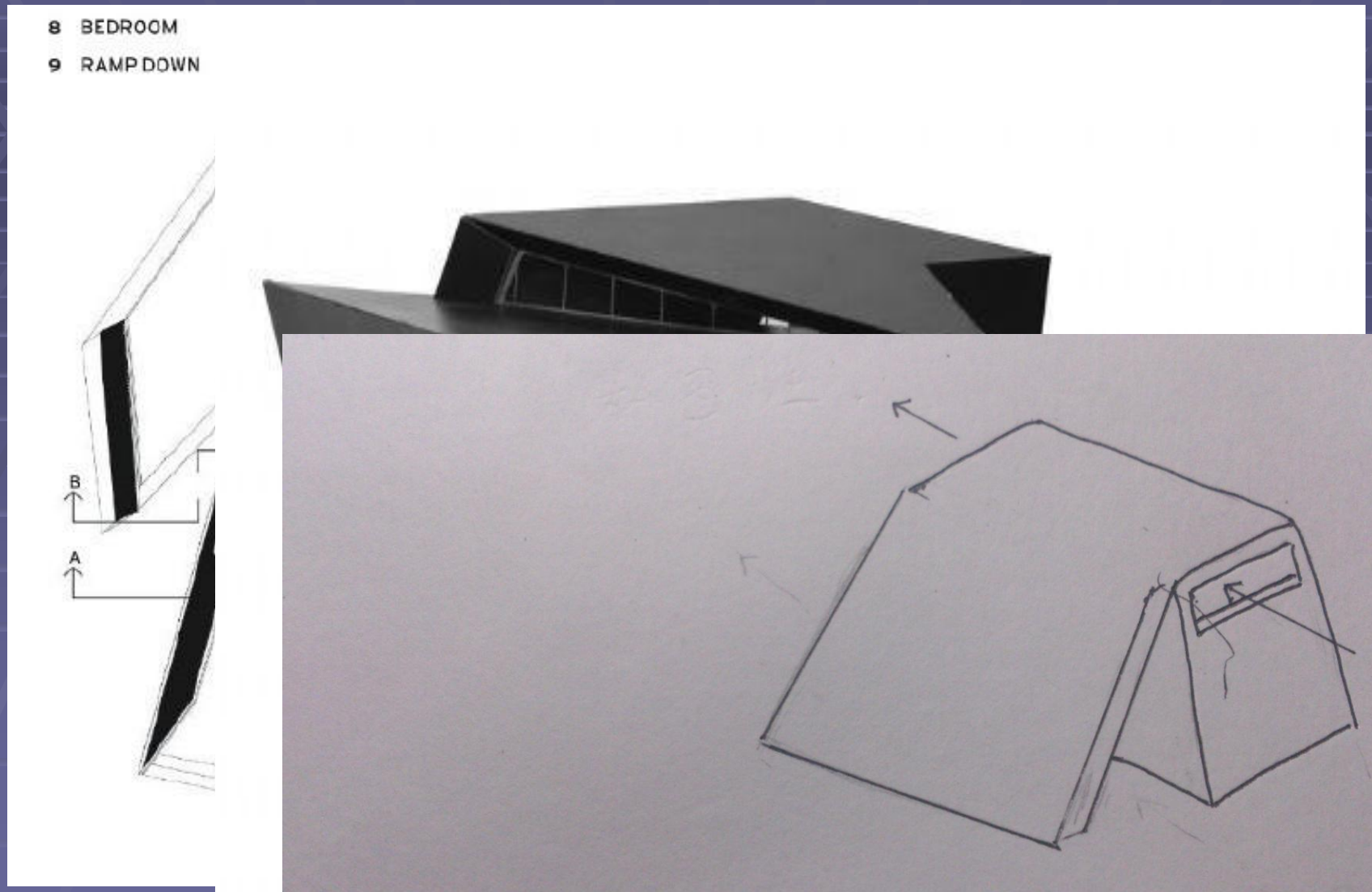

采光与灯光

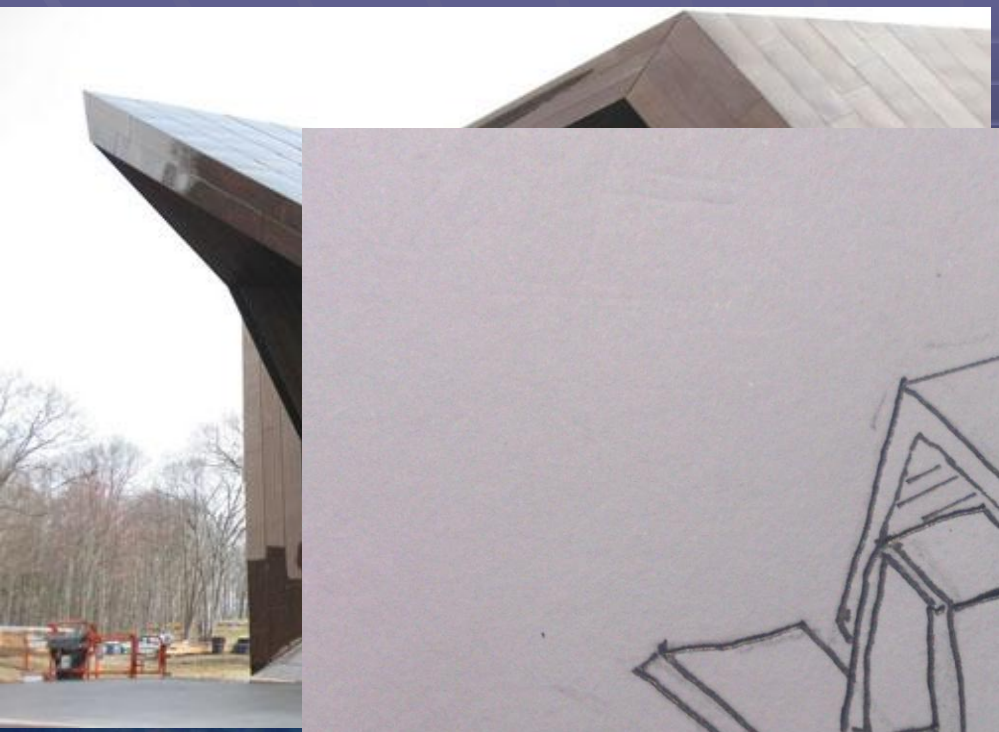

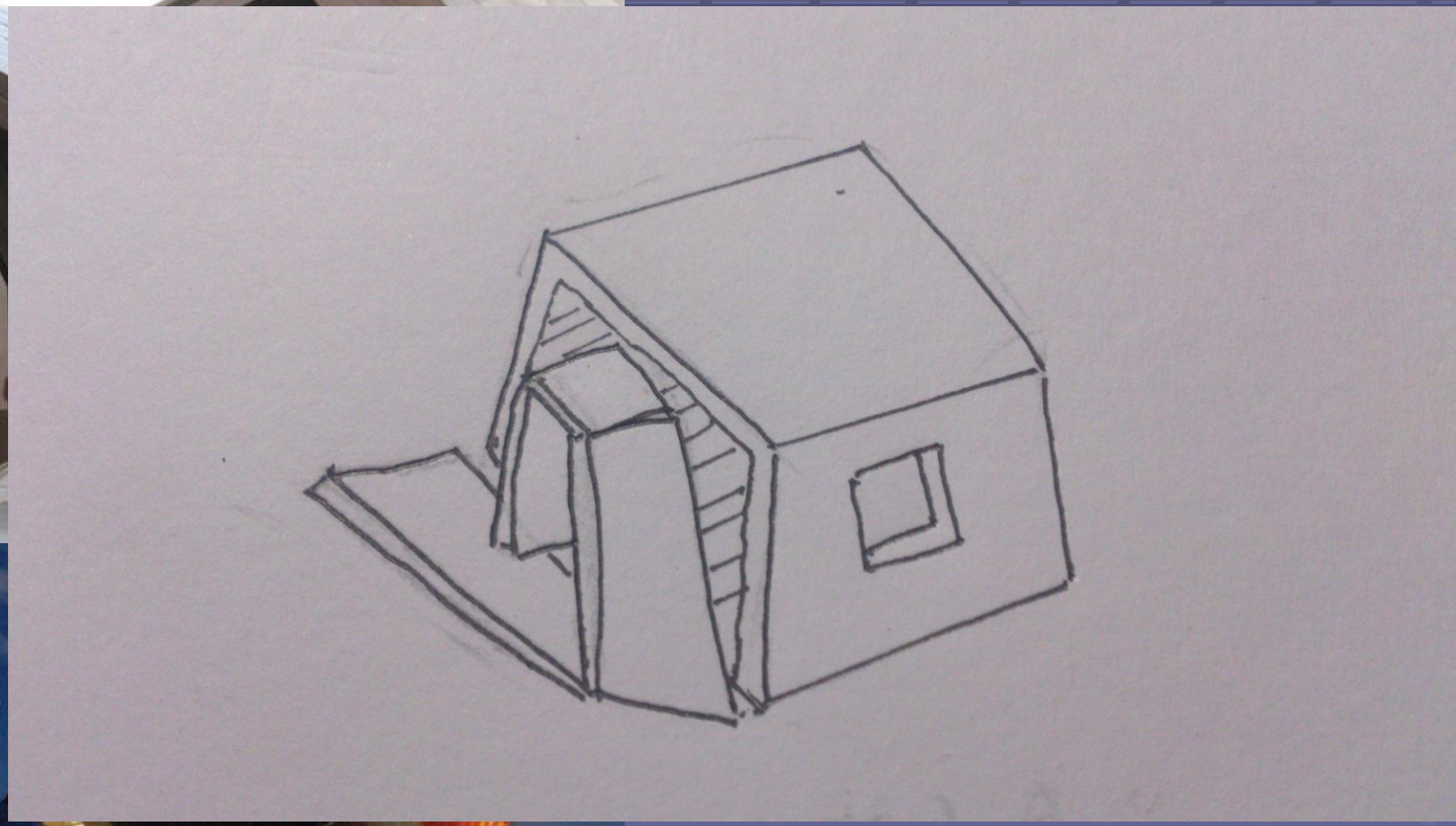

功能分区

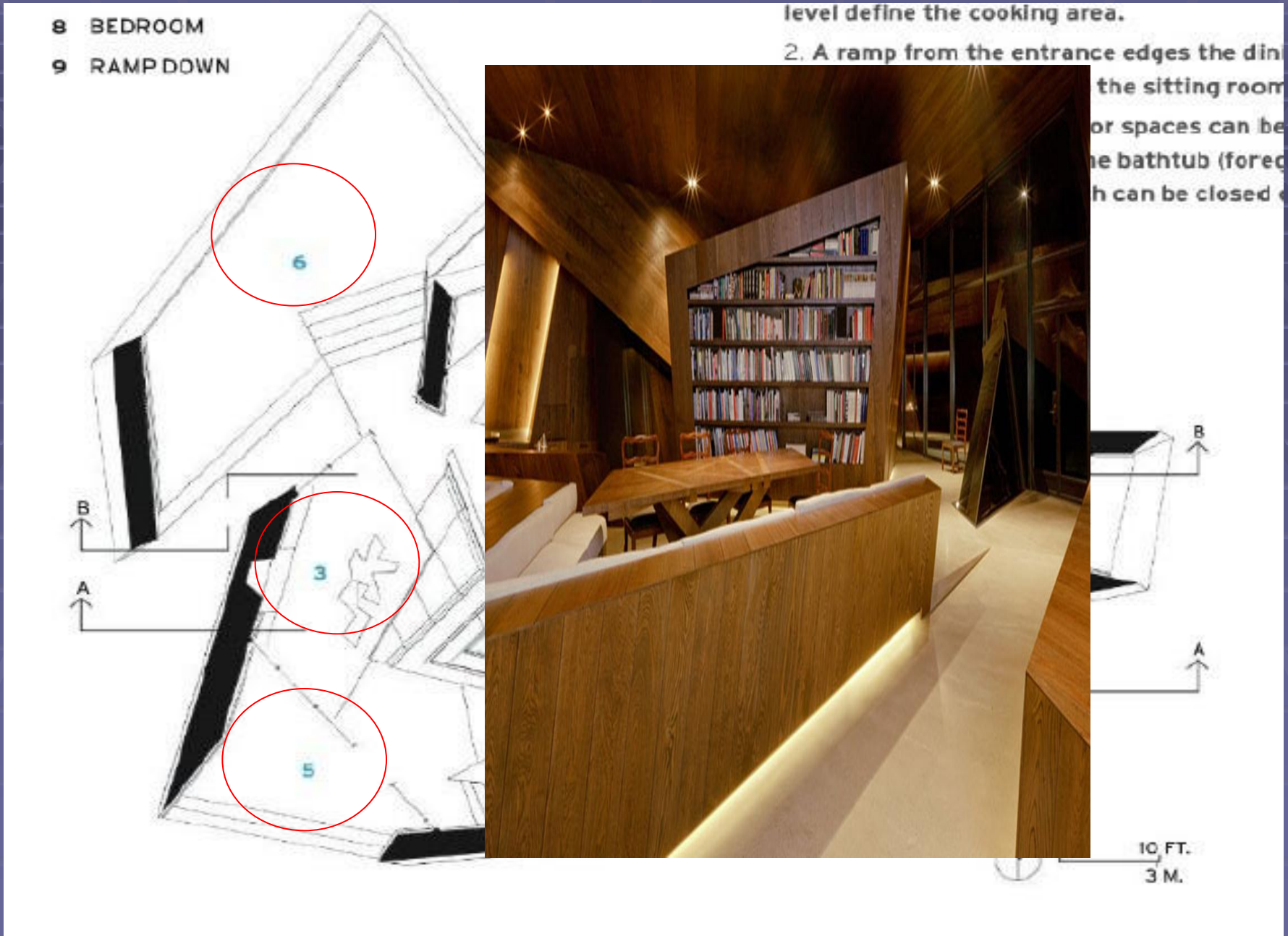
8 BEDROOM
9 RAMP DOWN
level define the cooking area.
2. A ramp from the entrance edges the din
the sitting room
or spaces can be
he bathtub (foreg
h can be closed
6
3
5
B
A
B
A
10 FT.
3 M.

Thank You !